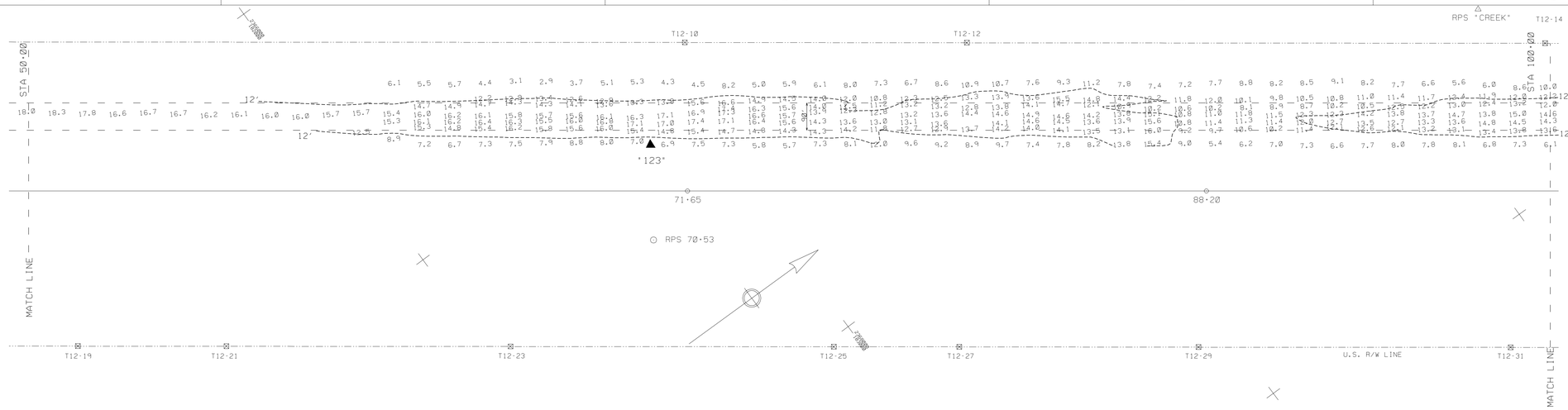

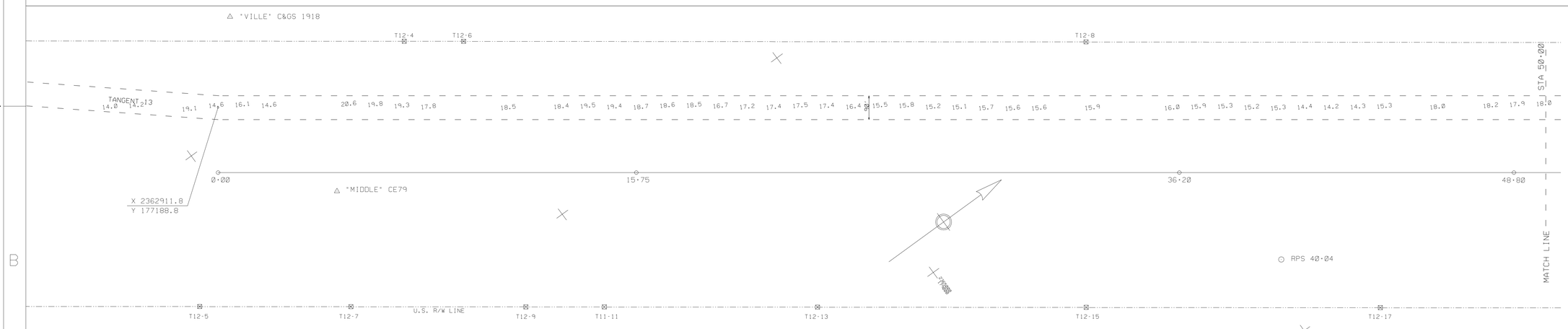

CONDITION SURVEY

NOTES:
SOUNDINGS ARE EXPRESSED IN FEET AND TENTHS AND REFER TO LOCAL M.L.W..
PROJECT SURVEYED WITH DISTRICT SURVEY VESSEL "HEWETT", USING D.G.P.S.
HORIZONTAL POSITIONING EQUIPMENT AND 200 KHZ SOUNDING EQUIPMENT.

TIDE GAGE LOCATED AT: BCN #122, MLW BEAUFORT DATUM

HORIZONTAL DATUM NAD 1983

NAVIGATION AIDS LOCATED BY SURVEY VESSEL, ACCURACY +/- 3 METERS.
LATITUDE AND LONGITUDE ARE EXPRESSED IN DEGREES, MINUTES AND DECIMAL MINUTES.

DESCRIPTION	EASTING	NORTHING	LATITUDE	LONGITUDE
DM # 123	2367134	182827	34 14.76941	77 47.11307

THIS PROJECT WAS DESIGNED BY THE WILMINGTON DISTRICT OF THE U.S. ARMY CORPS OF ENGINEERS. THE INITIALS OR SIGNATURES AND REGISTRATION DESIGNATIONS OF INDIVIDUALS APPEAR ON THESE PROJECT DOCUMENTS WITHIN THE SCOPE OF THEIR EMPLOYMENT AS REQUIRED BY ER 1110-1-8152.

THESE WAYPOINTS, MAPS AND ASSOCIATED INFORMATION REPRESENT THE RESULT OF SURVEYS MADE ON THE DATE INDICATED AND CAN ONLY BE CONSIDERED AS INDICATING THE GENERAL CONDITIONS EXISTING AT THAT TIME. BECAUSE THESE CONDITIONS ARE SUBJECT TO RAPID CHANGE DUE TO SHOALING EVENTS, A PRUDENT MARINER SHOULD NOT RELY EXCLUSIVELY ON THE INFORMATION PROVIDED HERE.

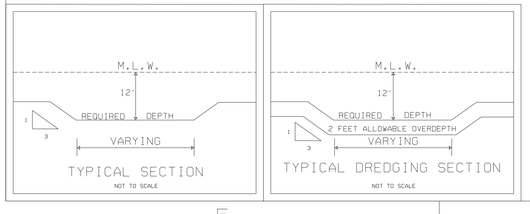

SCALE: 1:2000
200 100 0 100 200 300
SCALE IN FEET

SYMBOL	DESCRIPTIONS	DATE	APPROVED
	CONTROLLING DEPTH - 10.5'		

REVISIONS

U.S. ARMY ENGINEER DISTRICT
CORPS OF ENGINEERS
WILMINGTON, NORTH CAROLINA

ATLANTIC INTRACOASTAL WATERWAY
BETWEEN
NORFOLK, VA. AND THE ST. JOHNS RIVER, FLA. (WILMINGTON DISTRICT)

US ARMY CORPS
OF ENGINEERS

TANGENT 12 SECTION 3
(0+00 - 100+00)

MILEBOARD NO. 278 TO MILEBOARD NO. 282

SURVEYED BY: SEB	SCALE: 1:2000	PLATE NUMBER:	SURVEYED: 17 AUGUST 2004
DRAWN BY: EVH	DATE: 18 AUGUST 2004		MIX0817.DGN
CHECKED BY:	MAP FILE NO. BFT-CFR 105		SHEET OF
REVIEWED BY:			
APPROVED BY:			
CHIEF, NAVIGATION BRANCH			

G:\ HURRICANE \ CHARLEY2004 \ MASON INLET XING

.../Mason Inlet Xing/mix0817.dgn 08/18/2004 10:44:25 AM