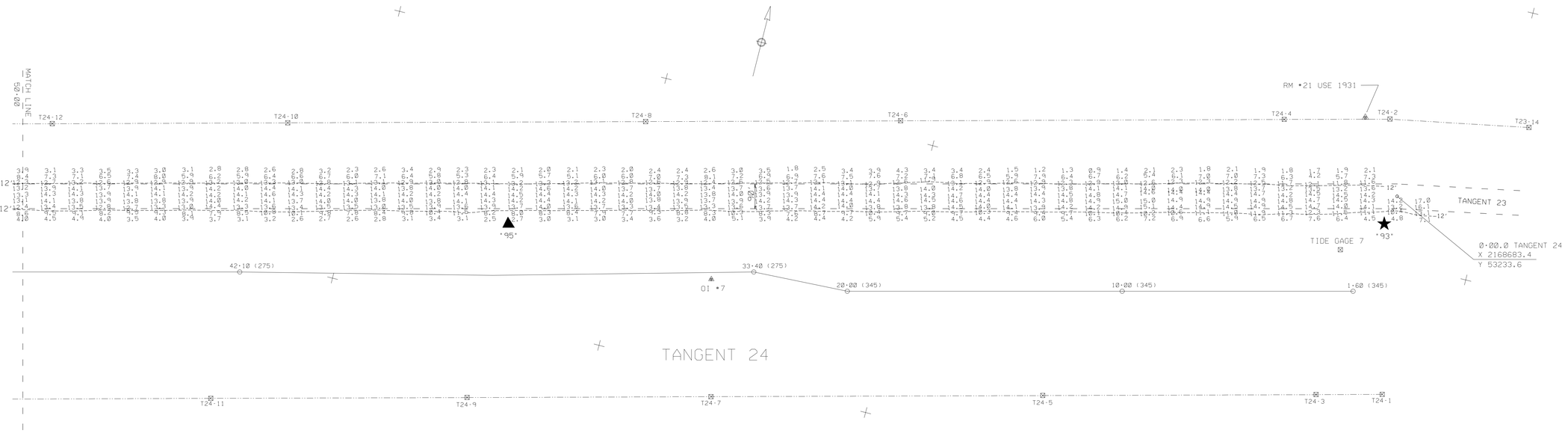

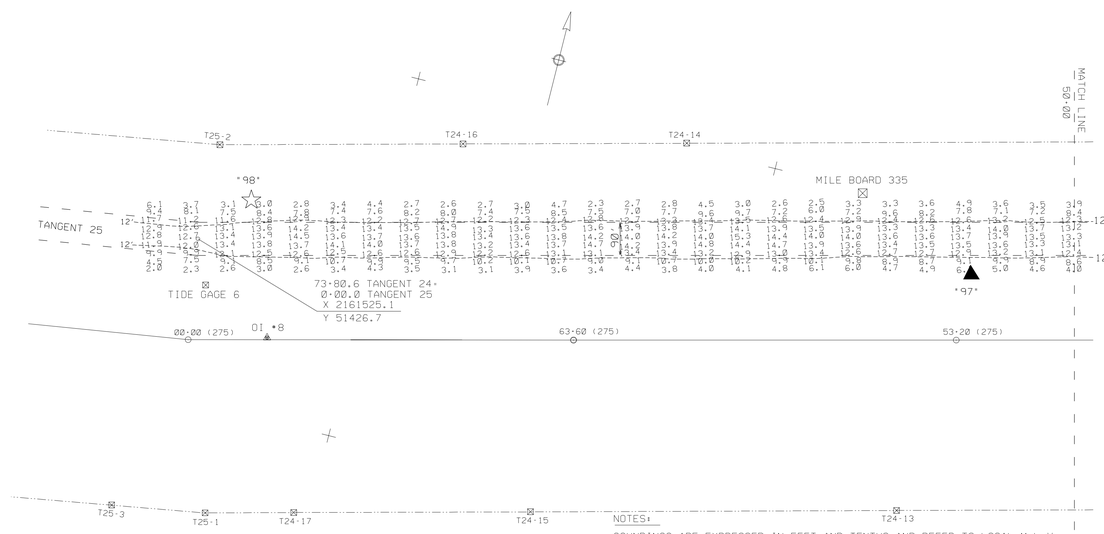

NOTES:

SOUNDINGS ARE EXPRESSED IN FEET AND TENTHS AND REFER TO LOCAL M.L.W..

PROJECT SURVEYED WITH DISTRICT SURVEY VESSEL "HEWETT". USING D.G.P.S. HORIZONTAL POSITIONING EQUIPMENT AND 200 KHZ SOUNDING EQUIPMENT.

TIDE GAGE LOCATED AT: DBCN *93.

HORIZONTAL DATUM NAD 1983

NAVIGATION AIDS LOCATED BY SURVEY VESSEL. ACCURACY +/- 3 METERS.

AIDS	NO.	EASTING	NORTHING	LAT	LONG
DBCN	* 93	2168659	53128	33.89470	78.44431
D.M.	* 95	2165569	52350	33.89258	78.45451
D.M.	* 97	2163587	51856	33.89125	78.46105
DBCN	* 98	2161613	51567	33.89049	78.46756
M.B.	* 335	2163239	51995	33.89164	78.46219

THE INFORMATION DEPICTED ON THIS MAP REPRESENTS THE RESULT OF SURVEYS MADE ON THE DATE INDICATED AND CAN ONLY BE CONSIDERED AS INDICATING THE GENERAL CONDITIONS EXISTING AT THAT TIME.

THIS PROJECT WAS DESIGNED BY THE WILMINGTON DISTRICT OF THE U.S. ARMY CORPS OF ENGINEERS. THE INITIALS OR SIGNATURES AND REGISTRATION DESIGNATIONS OF INDIVIDUALS APPEAR ON THESE PROJECT DOCUMENTS WITHIN THE SCOPE OF THEIR EMPLOYMENT AS REQUIRED BY ER 1110-1-8152.

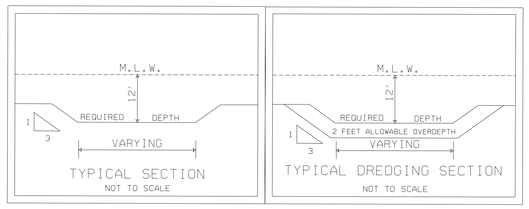

SCALE: 1:2000

200 100 0 100 200 300

SCALE IN FEET

CONDITION SURVEY

SYMBOL	DESCRIPTIONS	DATE	APPROVED

REVISIONS

U.S. ARMY ENGINEER DISTRICT
CORPS OF ENGINEERS
WILMINGTON, NORTH CAROLINA

ATLANTIC INTRACOASTAL WATERWAY
BETWEEN
NORFOLK, VA. AND THE ST. JOHNS RIVER, FLA. (WILMINGTON DISTRICT)

US ARMY CORPS OF ENGINEERS

CAPE FEAR RIVER - LITTLE RIVER, S.C.
TANGENT 24

SURVEYED BY: M.A.S.	SCALE: 1:2000	PLATE NUMBER:	SURVEYED: 10 OCTOBER 2002
DRAWN BY: J.D.E.	DATE: 15 OCTOBER 2002		
CHECKED BY:	MAP FILE NO.		
REVIEWED BY:			
APPROVED BY:			
CHIEF, NAVIGATION BRANCH	AIWW CFR-LR 105-02-10		SHEET OF

AIWW/CRLR/2002/T24CS283.CO/.XST/.DGN

.../CFRLR/2002/T-24/t24cs283.dgn 10/15/2002 07:45:21 AM